# Cottonwood N

SAUSSY BURBANK

843-900-3261
nexton@saussyburbank.com

| | |
|---|---|
| **Bedrooms** | 2/3 |
| **Bathrooms** | 2 |
| **Total Heated** | 1542 sq. ft. |

nexton®

SAUSSY BURBANK

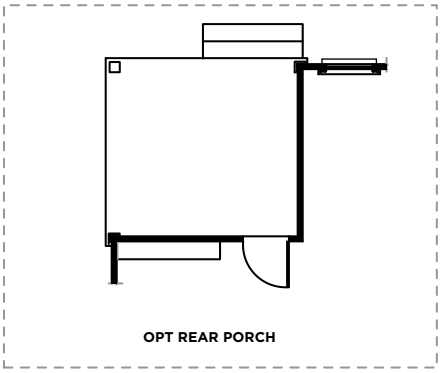


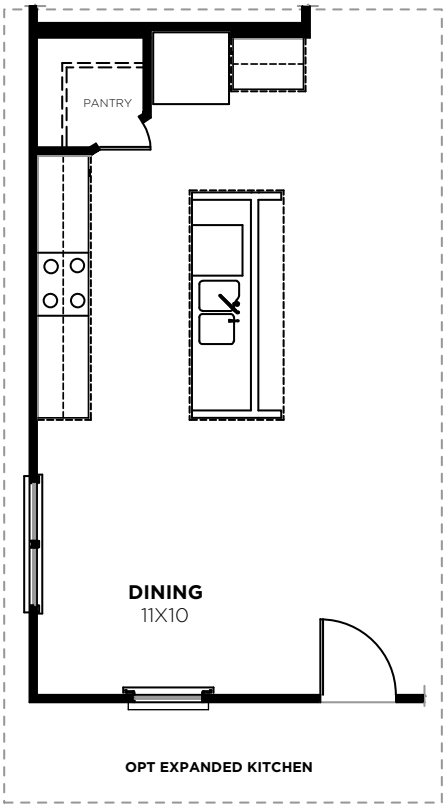


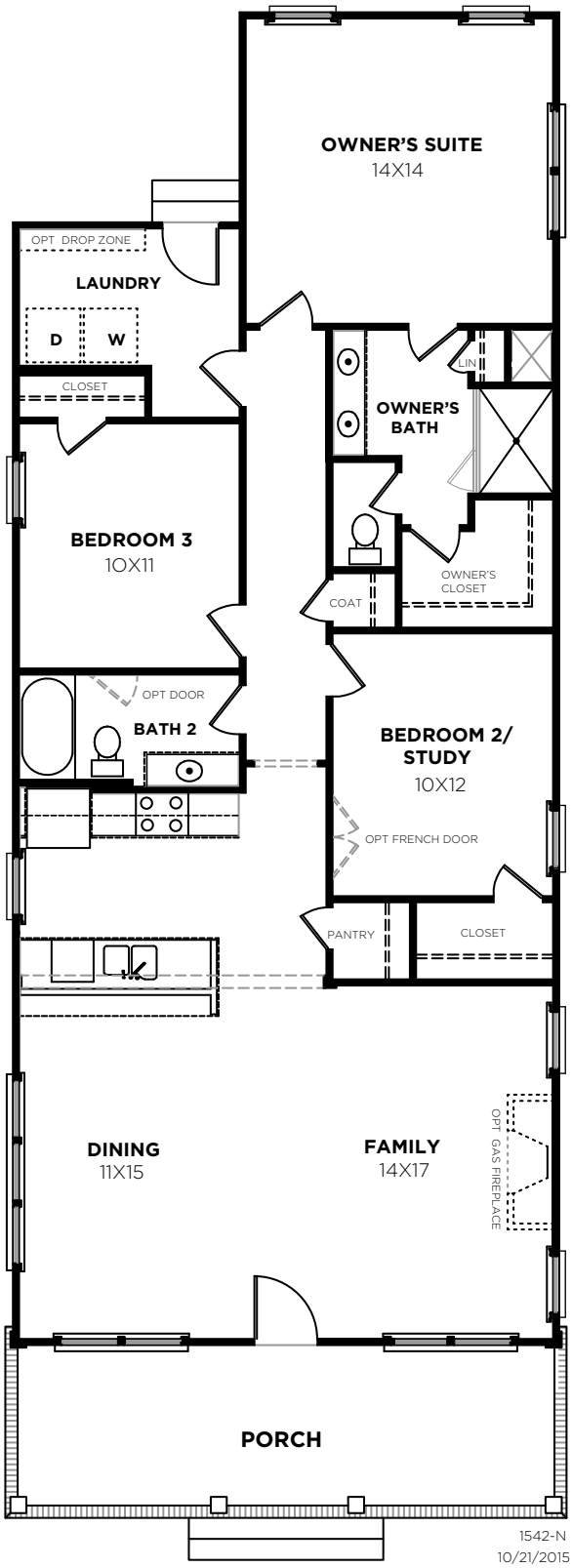


1542-N
10/21/2015

©2015. Saussy Burbank, LLC "Saussy Burbank" is a service mark of Saussy Burbank, LLC. Prices, plans, designs, architectural renderings, uses, dimensions, specifications, materials, availability, improvements and amenities depicted or described herein are subject to change or cancellation (in whole or in part) without notice. Illustrations may include artists' depictions and differ from final improvements. Equal housing opportunity.

EQUAL HOUSING OPPORTUNITY